THIS DRAWING IS UNPUBLISHED. RELEASED FOR PUBLICATION 2016
© COPYRIGHT 2016 BY TE CONNECTIVITY ALL RIGHTS RESERVED.

LOC	DIST

REVISIONS

P	LTR	DESCRIPTION	DATE	DWN	APVD
	C1	REVISED PER PCN-23-187402	19SEP2023	OD	IG
	D	REVISED PER PCN-23-192205	06FEB2024	RK	CB
	D1	REVISED PER PCN-24-210159	22MAY2024	PS	CB
	D2	REVISED PER PCN-24-226098	18NOV2024	PS	CB

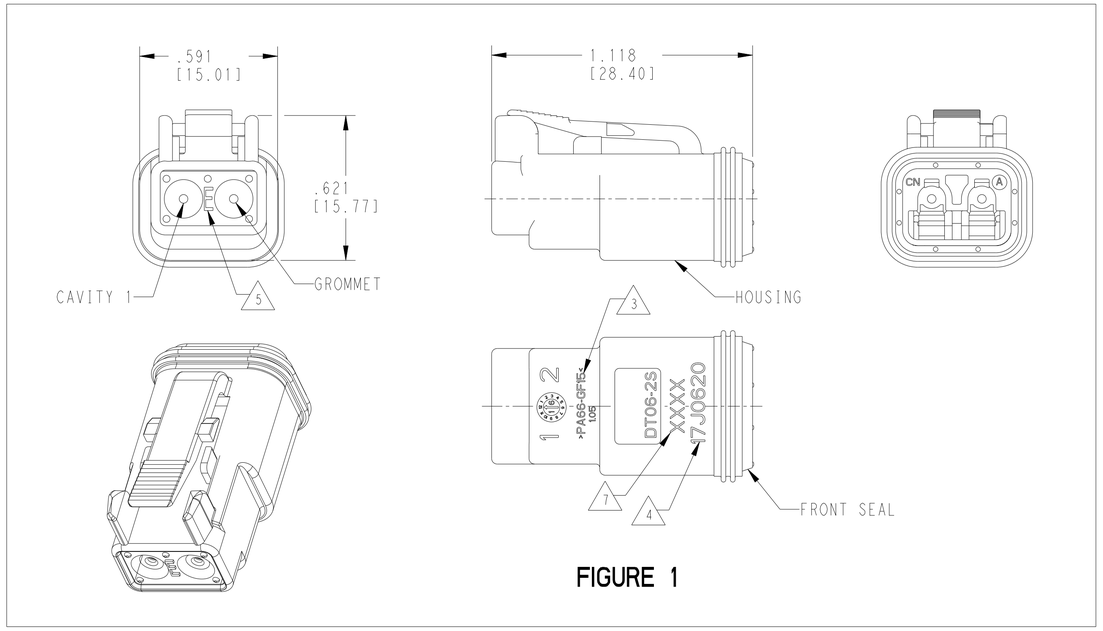

FIGURE 1

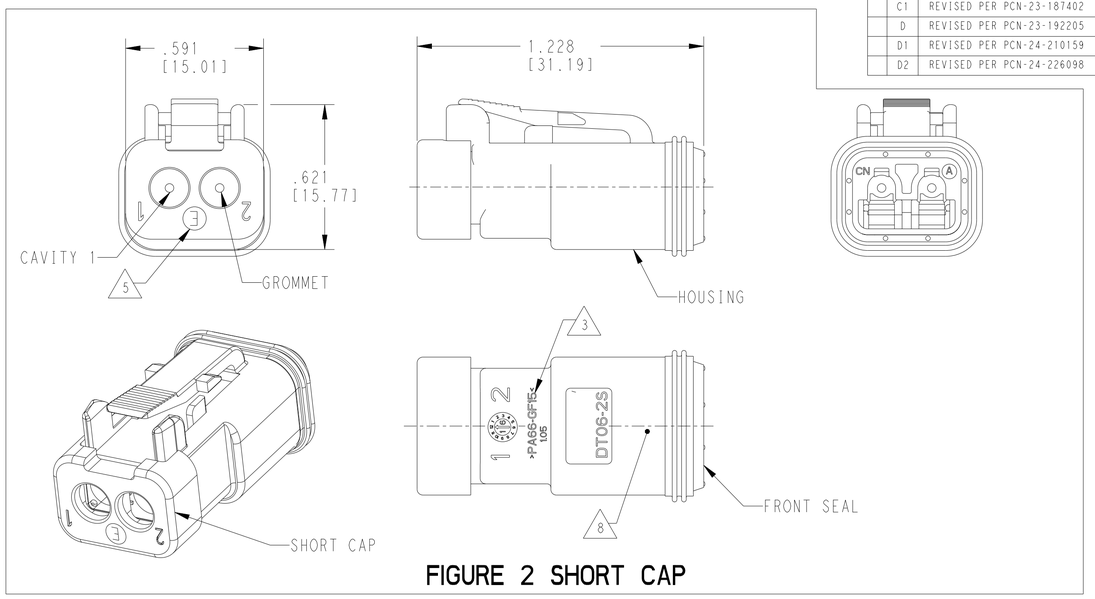

FIGURE 2 SHORT CAP

CONTACT SIZE	WIRE RANGE	INSULATION OD SEALING RANGE	SEAL IDENTIFICATION
16	14-20 AWG [2.5-0.5mm²]	.088-.145 [2.23-3.68]	STANDARD SEAL
		.053-.120 [1.35-3.05]	EXTRA THIN SEAL E-SEAL

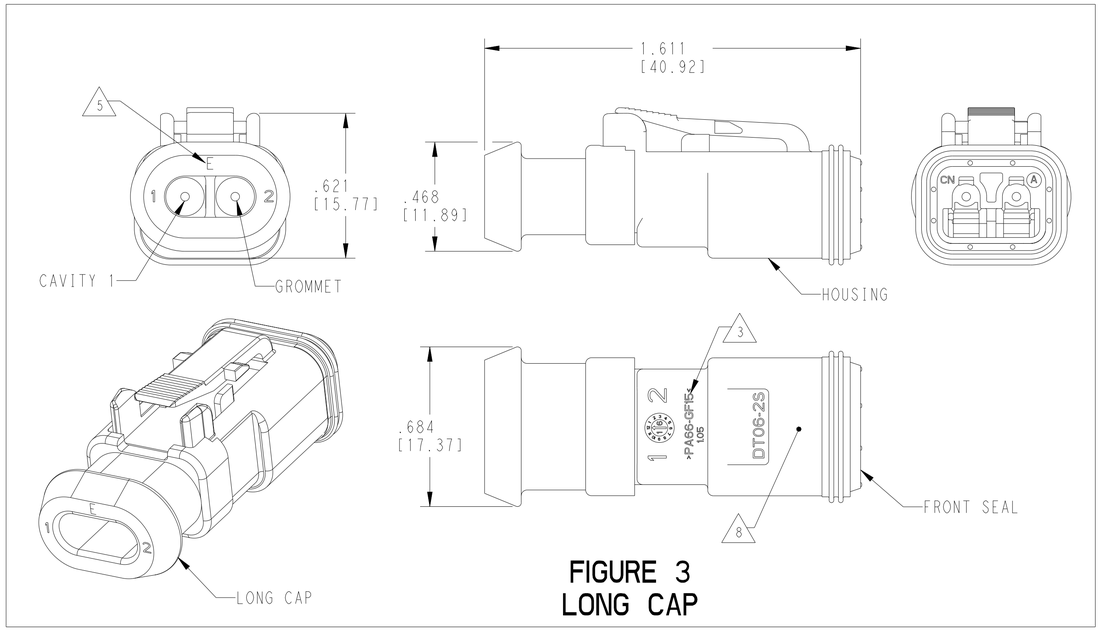

FIGURE 3
LONG CAP

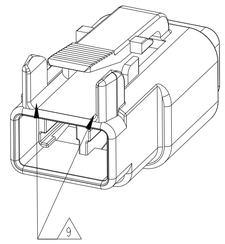

TE INTERNAL PART NUMBER	DEUTSCH PART NUMBER	PN REV	HOUSING COLOR	STANDARD SEAL GROMMET	EXTRA THIN SEAL E-SEAL GROMMET	BLOCKED SEAL 10	SHORT CAP	LONG CAP	FIGURE
DT06-2S	DT06-2S	A	GREY	X					1
DT06-2S-C015	DT06-2S-C015	F	GREY		X				1
DT06-2S-C017	DT06-2S-C017	B	GREY			X	X		2
DT06-2S-CE01	DT06-2S-CE01	E	GREY		X		X		2
DT06-2S-CE03	DT06-2S-CE03	B	BLACK		X		X		2
DT06-2S-CE04	DT06-2S-CE04	C	GREY		X			X	3
DT06-2S-CE05	DT06-2S-CE05	B	BLACK		X		X		2
DT06-2S-CE06	DT06-2S-CE06	B	BLACK		X				1
DT06-2S-CE13	DT06-2S-CE13	B	BLACK		X			X	3
DT06-2S-E003	DT06-2S-E003	B	GREY	X			X		2
DT06-2S-E004	DT06-2S-E004	A	BLACK	X					1
DT06-2S-E005	DT06-2S-E005	A	BLACK	X			X		2
DT06-2S-E008	DT06-2S-E008	B	GREY	X				X	3
DT06-2S-EP04	DT06-2S-EP04	C	GREY	X			X		2
DT06-2S-EP06	DT06-2S-EP06	B	BLACK	X			X		2
DT06-2S-EP11	DT06-2S-EP11	A	BLACK	X				X	3
DT06-2S-P004	DT06-2S-P004	A	GREY	X					1
DT06-2S-P012	DT06-2S-P012	A	BLACK	X					1
1-2448100-1	DT06-2S-TE09	A	BROWN		X				1
1-2448100-2	DT06-2S-TE03	A	GREEN		X				1
1-2448100-3	DT06-2S-TE07	A	BLUE		X				1
2-2448100-1	DT06-2S-TN09	A	BROWN	X					1
2-2448100-2	DT06-2S-TN03	A	GREEN	X					1
2-2448100-3	DT06-2S-TN07	A	BLUE	X					1
3-2448100-1	DT06-2S-EE18	A	BROWN		X		X		2
3-2448100-2	DT06-2S-EE16	A	GREEN		X		X		2
3-2448100-3	DT06-2S-EE17	A	BLUE		X		X		2
4-2448100-1	DT06-2S-EE14	A	BROWN	X			X		2
4-2448100-2	DT06-2S-EE13	A	GREEN	X			X		2
4-2448100-3	DT06-2S-EE06	A	BLUE	X			X		2

3 MATERIAL: HOUSING: PA66 GF15, SEE TABLE FOR COLOR
SHORT, LONG CAP: PA66 GF15, BLACK
GROMMET: E-SEAL VMQ (BURNT RED)
N-SEAL VMQ (RED-ORANGE)
FRONT SEAL: VMQ (RED-ORANGE),

2. THIS PLUG MATES WITH DT04-2P-XXXX RECEPTACLE. (XXXX = ALL MODIFICATIONS)

1. SECONDARY WEDGE LOCK SOLD SEPARATELY: W2SX-XXXX. (X = A,B,C,D KEY, XXXX = ALL MODIFICATIONS) W2S OR W2S-P012 MAY BE USED WITH THESE PLUGS, W2S-P012 IS RECOMMENDED.

NOTES: UNLESS OTHERWISE SPECIFIED

7 XXXX IDENTIFIES THE MODIFICATION NUMBER, IF APPLICABLE. EXAMPLE: "E003" FOR DT06-2S-E003, OR BLANK FOR DT06-2S.

6. FOR CONTACTS AND WIRE PERFORMANCE AND APPLICATION CHARACTERISTICS SEE CUSTOMER DRAWING 0425-015-0000.

5 "E" IDENTIFIES E-SEAL.

4 DATE CODE: IDENTIFIES THE YEAR, MONTH, DAY AND HOUR OF ASSEMBLY.
YEAR: FIRST AND SECOND DIGITS. (17 = 2017)
MONTH: THIRD DIGIT, EXCLUDING I. A = JAN, B = FEB, C = MARCH ... (K = OCTOBER)
DAY: FOURTH AND FIFTH DIGITS (14 = 14th DAY)
HOUR: SIXTH AND SEVENTH DIGITS (11 = 11AM)

10 CONNECTORS WITH A BLOCKED SEAL INCLUDE THE W2S-P012 WEDGE INSTALLED AS PART OF THE PLUG ASSEMBLY.

9 ALTERNATE CONSTRUCTION EXCLUSIVELY FOR PARTS PRODUCED IN CHINA.

8 ADDITIONAL MARKING PER NOTE 4 AND 7 EXCLUSIVELY FOR PARTS WITH CAPS PRODUCED IN CHINA.

THIS DRAWING IS A CONTROLLED DOCUMENT.

DIMENSIONS: in [mm]

TOLERANCES UNLESS OTHERWISE SPECIFIED:
0 PLC ±
1 PLC ±
2 PLC ±
3 PLC ±.025 [0.64]
4 PLC ±
ANGLES ±0° 30' 0"

MATERIAL 3

FINISH

DWN JAIME C. APOSTOL 24OCT2016
CHK D.MEYER 24OCT2016
APVD D.MEYER 24OCT2016
PRODUCT SPEC 108-151009
APPLICATION SPEC 114-151009
WEIGHT

TE Connectivity

NAME 2 WAY PLUG, STANDARD SEAL EXTRA THIN SEAL, SHORT CAP AND LONG CAP, DT SERIES

SIZE	CAGE CODE	DRAWING NO	RESTRICTED TO
A1	4AFU8	C-DT06-2S-XXXX	-

CUSTOMER DRAWING SCALE 3:1 SHEET 1 OF 1 REV D2

4805 (3/11)