THIS DRAWING IS UNPUBLISHED RELEASED FOR PUBLICATION 2018
© COPYRIGHT 1997 BY TE CONNECTIVITY ALL RIGHTS RESERVED.

REVISIONS

P	LTR	DESCRIPTION	DATE	DWN	APVD
	NC	NEW RELEASE PER E.O P15504	22FEB2007	-	RDR
	A	NEW RELEASE PER E.O. P20205	04JUN2009	DM	RDR
	B	REVISED PER E-18-001206	24JAN2018	JA	DM
	B1	REVISED PER PCN E-19-018080	19NOV2019	MK	DM

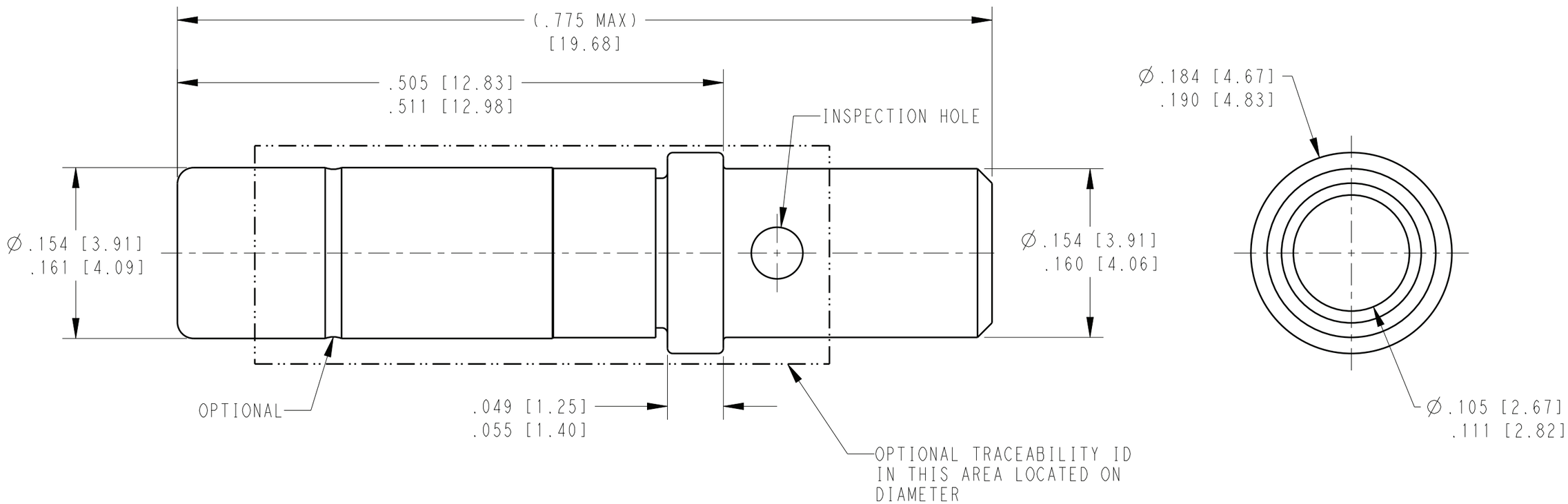

TE INTERNAL PN	DEUTSCH PN	PLATING
0462-203-1231	0462-203-1231	GOLD
0462-203-12141	0462-203-12141	NICKEL

B1 1. SEE APPLICATION SPECIFICATION 114-151004 FOR CRIMP TOOLS AND WIRE RANGE

NOTES:

THIS DRAWING IS A CONTROLLED DOCUMENT.

DIMENSIONS: INCHES [mm]

TOLERANCES UNLESS OTHERWISE SPECIFIED:
0 PLC ±
1 PLC ±
2 PLC ±
3 PLC ±
4 PLC ±
ANGLES ±

MATERIAL

FINISH

DWN D.MEYER 16DEC1997
CHK M.GONZALES 03JUN2009
APVD R.REED 04JUN2009
PRODUCT SPEC 108-151004
APPLICATION SPEC 114-151004
WEIGHT 1.27g

TE Connectivity

NAME CONTACT SOCKET SIZE 12

SIZE A3 | CAGE CODE 4AFU8 | DRAWING NO C-0462-203-12XX | RESTRICTED TO

CUSTOMER DRAWING | SCALE 10:1 | SHEET 1 OF 1 | REV B1

1470-19 (3/13)