THIS DRAWING IS UNPUBLISHED. RELEASED FOR PUBLICATION 2018
© COPYRIGHT 1997 BY TE CONNECTIVITY ALL RIGHTS RESERVED.

REVISIONS

| P | LTR | DESCRIPTION | DATE | DWN | APVD |
|---|---|---|---|---|---|
| | NC | NEW RELEASE PER E.O. P15506 | 23DEC1997 | DM | RDR |
| | A | RELEASED PER E.O. P15996 | 25MAY1999 | DM | RDR |
| | B | RELEASED PER PCN E-18-001206 | 24JAN2018 | JA | DM |
| | B1 | REVISED PER PCN E-19-018080 | 21NOV2019 | MK | DM |

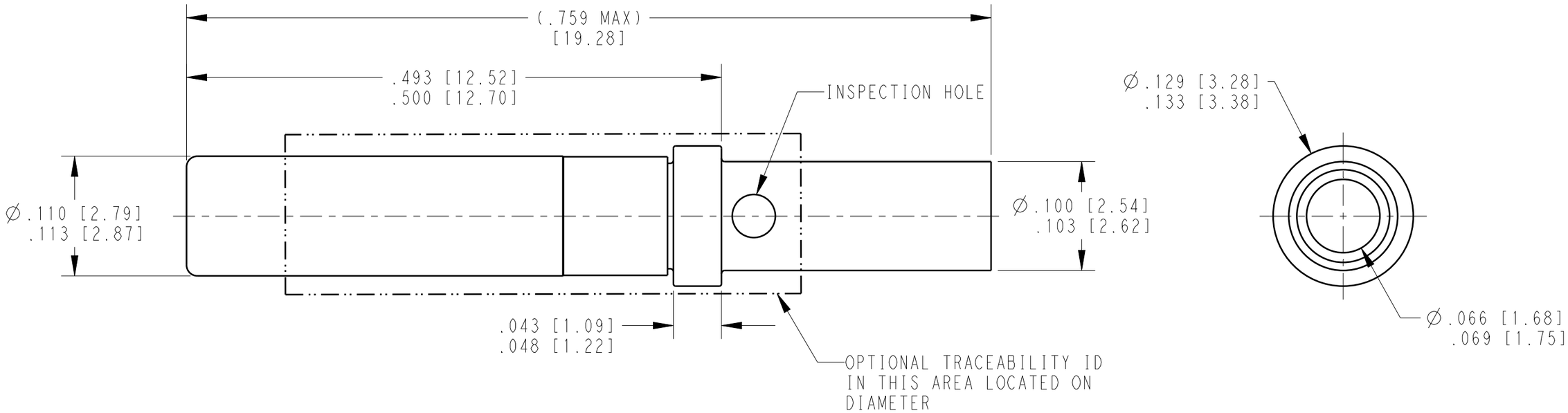


| TE INTERNAL PN | DEUTSCH PN | PLATING |
|---|---|---|
| 0462-201-1631 | 0462-201-1631 | GOLD |
| 0462-201-16141 | 0462-201-16141 | NICKEL |

NOTES:

1. SEE APPLICATION SPECIFICATION 114-151004 FOR CRIMP TOOLS AND WIRE RANGE.

THIS DRAWING IS A CONTROLLED DOCUMENT.

DIMENSIONS: INCHES [mm]

TOLERANCES UNLESS OTHERWISE SPECIFIED:
0 PLC ±
1 PLC ±
2 PLC ±
3 PLC ±
4 PLC ±
ANGLES ±

MATERIAL

FINISH

DWN D.MEYER 17DEC1997
CHK V.TOMSA 25MAY1999
APVD R.REED 25MAY1999
PRODUCT SPEC 108-151004
APPLICATION SPEC 114-151004
WEIGHT 0.60g

TE Connectivity

NAME CONTACT SOCKET SIZE 16

| SIZE | CAGE CODE | DRAWING NO | RESTRICTED TO |
|---|---|---|---|
| A3 | 4AFU8 | C-0462-201-16XX | - |

CUSTOMER DRAWING

SCALE 10:1 SHEET 1 OF 1 REV B1

1470-19 (3/13)