THIS DRAWING IS UNPUBLISHED RELEASED FOR PUBLICATION 2018
© COPYRIGHT 2005 BY TE CONNECTIVITY ALL RIGHTS RESERVED.

REVISIONS

| P | LTR | DESCRIPTION | DATE | DWN | APVD |
|---|---|---|---|---|---|
| | A | REVISED PER PCN E-18-001206 | 24JAN2018 | JA | DM |
| | A1 | REVISED PER PCN E-19-018080 | 19NOV2019 | MK | DM |
| | | | | | |
| | | | | | |

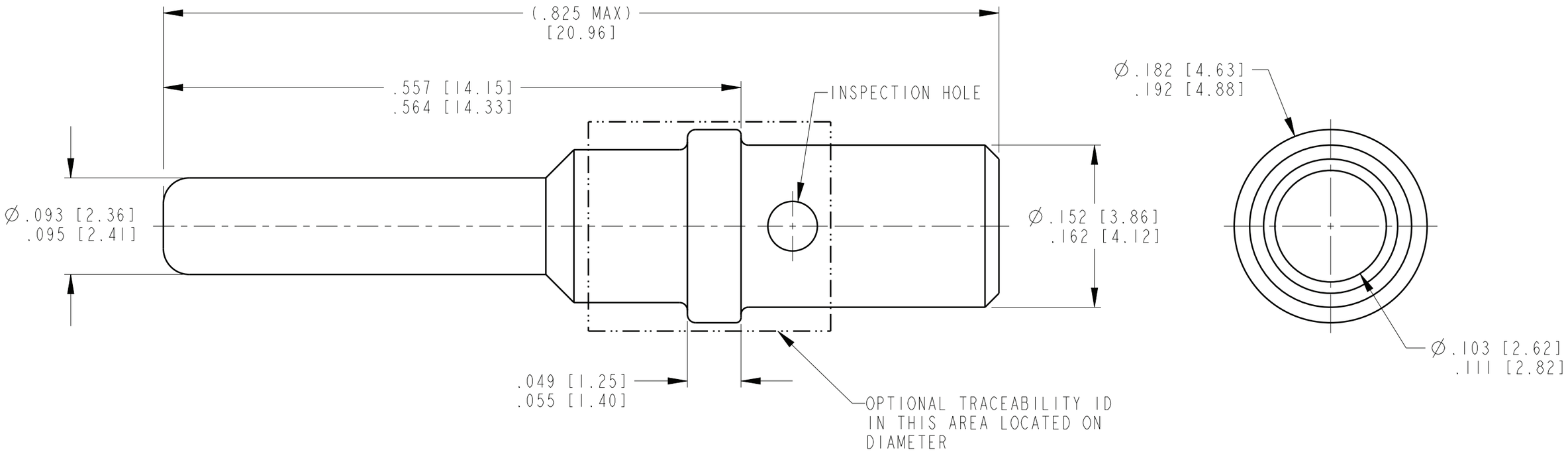


| TE INTERNAL PN | DEUTSCH PN | PLATING |
|---|---|---|
| 0460-204-12141 | 0460-204-12141 | NICKEL |

(A1) 1. SEE APPLICATION SPECIFICATION 114-151004 FOR CRIMP TOOLS AND WIRE RANGE

NOTES:

THIS DRAWING IS A CONTROLLED DOCUMENT.

DIMENSIONS: INCHES [mm]

TOLERANCES UNLESS OTHERWISE SPECIFIED:
0 PLC ±
1 PLC ±
2 PLC ±
3 PLC ±
4 PLC ±
ANGLES ±

MATERIAL

FINISH

DWN J.APOSTOL 08MAR2005
CHK B.BYFORD 14MAR2005
APVD R.REED 14MAR2005
PRODUCT SPEC 108-151004
APPLICATION SPEC 114-151004
WEIGHT 1.27g

TE Connectivity

NAME CONTACT PIN SIZE 12

| SIZE | CAGE CODE | DRAWING NO | RESTRICTED TO |
|---|---|---|---|
| A3 | 4AFU8 | C-0460-204-12XX | |

CUSTOMER DRAWING

SCALE 10:1 SHEET 1 OF 1 REV A1

1470-19 (3/13)