AFD & PRESENTACION S.A.C.

MZ A1 LT 20 Parcela Lucumo N4 Lurín, Lima

48W

3840LM

IP68

MULTI-VOLT 9-32VDC

EMC R10 TESTED

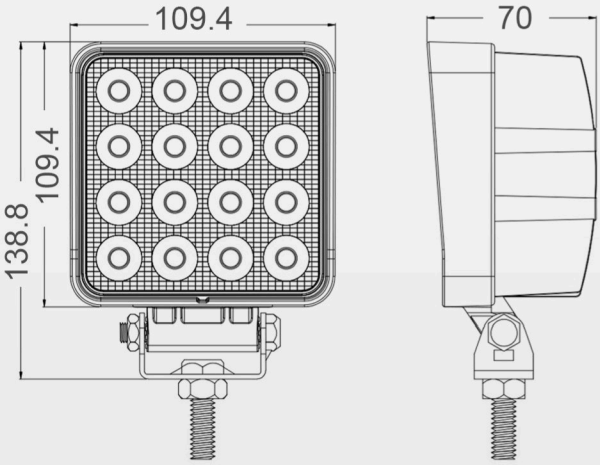

VIDEO

Model: AFD-4049

SPECOFOCATOPNS:

Power	48W
Voltage range	9-32V DC
Luminous flux	3840LM
Light type	16pcs X Bridgelux 3W
Waterproof rate	IP68
Material	PC lens
Operating temperature	-45℃-+85℃
Beam	flood and spot beam optional
Material of housing	aluminum alloy
EMC R10 approval	

Front

Side

Back

Encuentra nuestras redes